4MP Full Color Alarm Wifi PT Camera

Uho-P2C-M4F4

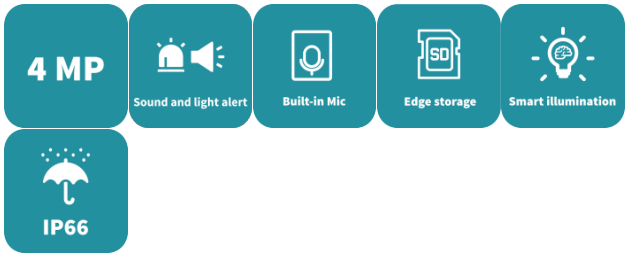



Features

- High quality image with 4MP, 1/2.9" CMOS sensor and F1.0 large aperture lens
- 4MP (2560*1440)@25/20fps; 3MP (2304*1296)@30/25fps; 2MP (1920*1080)@30/25fps;
- Ultra 265, H.265, H.264
- Colorhunter with Wise-ISP technology ensures 24-hour full-color images
- Support digital WDR (Wide Dynamic Range)
- Built-in Mic & Speaker, support two-way audio, offer better interaction
- Support sound and light warning, makes warning and alarming more noticeable
- Warm Light, up to 30m warm light distance
- Supports 512 GB Micro SD card
- Wi-Fi connection and easy installation
- IP66 ingress protection

Specifications

Model	Uho-P2C-M4F4
Camera	
Max Resolution	4 MP
Sensor	1/2.9" CMOS
Min. Illumination	Colour: 0.0003Lux (F1.0, AGC ON)
Shutter	Auto/Manual, 1 to 1/100000 s
S/N	> 52 dB
WDR	DWDR
Lens	
Digital Zoom	4X
Focal Length	4.0 mm
Iris	F1.0
Field of View (H)	85.4°
Field of View (V)	47.5°
Field of View (D)	98.5°
Lens Type	Fixed
Iris Type	Fixed
DORI	
DORI Distance (Lens)	4.0mm
DORI Distance (Detect)	64.3 (210.9 ft)
DORI Distance (Observe)	25.7 (84.4 ft)
DORI Distance (Recognize)	12.9 (42.2 ft)
DORI Distance (Identify)	6.4 (21.1 ft)
Illuminator	
Illumination Distance (Warm Light)	30 m (98.4 ft.)
Supplemental Light	Warm light
Image	
Smart Illumination	Support
White Balance	Auto, Outdoor, Fine tune, Sodium lamp, Locked, Auto2
Digital Noise Reduction	2D/3D DNR
HLC	N/A
Defog	Digital defog
Dewarping	N/A
Flip	Normal, Flip vertical, Flip horizontal, 180°
BLC	N/A
Video	
Video Compression	Ultra 265, H.265, H.264
Frame Rate	Main Stream: 4MP (2560*1440), Max 25fps; 3MP (2304*1296), Max 30fps; 2MP (1920*1080), Max 30fps; 720P (1280*720), Max 30fps; Sub Stream: 720P (1280*720), Max 30fps; D1 (720*576), Max 30fps; 640*360, Max 30fps; 2CIF

	(704*288), Max 30fps; CIF (352*288), Max 30fps;
U-code	Support
Video Bit Rate	128 Kbps to 6144 Kbps
Privacy Mask	Support (only NVR)
ROI	Support
OSD	Up to 4 OSDs
Video Stream	Dual streams
Events	
Basic Detection	Human body detection, Motion detection, Audio detection
General Function	IP address filtering, Access policy, ARP protection, RTSP authentication, User authentication, HTTP authentication
Intelligent	
Auto Tracking	Support
Audio	
Audio Compression	G.711U, G.711A
Audio Bitrate	64 Kbps
Two-way Audio	Support
Suppression	Support
Sampling Rate	8 kHz
Storage	
Network Storage	ANR
Edge Storage	MicroSD, up to 512 GB
Network	
Protocols	IPv4, TCP, UDP, DHCP, RTSP, DNS, DDNS, NTP, HTTP
Wi-Fi	2.4G Wi-Fi (IEEE802.11b/g/n/ax), built-in antenna
Web Browser	Plug-in required live view: IE 10+, Chrome 45+, Firefox 52+, Edge 79+
Compatible Integration	API
Client	APP, Uniarch client
Wi-Fi	
Wireless Standards	IEEE802.11b/g/n/ax
Frequency Range	2.4 GHz to 2.4835 GHz
Channel Bandwidth	20/40 MHz Support
Modulation Mode	802.11b: CCK 802.11g/n: OFDM 802.11ax: OFDMA
Wi-Fi Security	64/128-bit WEP, WPA-PSK/WPA2-PSK
Transmit Power	802.11b: 17±1.5 dBm@11 Mbps802.11g: 16±1.5 dBm@54 Mbps802.11n: 16±1.5 dBm@MCS7802.11ax: 16±1.5 dBm@MCS9
Receive Sensitivity	802.11b: -76 dBm@11 Mbps (Typical)802.11g: -65 dBm@54Mbps (Typical)802.11n: -61 dBm@MCS7, HT40 (Typical)802.11ax: -54 dBm@MCS9, HE40 (Typical)
Transmission Rate	802.11b: 11 Mbps802.11g: 54 Mbps802.11n: up to 150 Mbps802.11ax: up to 270 Mbps
Interface	
Audio I/O	N/A

Alarm I/O	N/A
Built-in Mic	Support
Built-in Speaker	Support
WIFI	Support
Network	1 × RJ45 10 M/100 M Base-TX Ethernet
Certification	
EMC	CE-EMC (EN 55032, EN 61000-3-3, EN IEC 61000-3-2, EN 50130) FCC (FCC 47 CFR part15 B)
RF	FCC ID (FCC CFR 47 part15 C) CE RED (EN 301 489-1, EN 301 489-17, EN 300 328, EN 62311)
Safety	CE LVD (EN 62368-1)
Environment	CE-RoHS (2011/65/EU; (EU) 2015/863) ; WEEE (2012/19/EU) ;
Protection	IP66 (IEC 60529)
General	
Power Interface	Ø5.5 mm coaxial power plug
Power	DC 12V±25%
Surge Protection	4 KV
Dimensions	Φ109mm*141mm*151mm (Φ4.3”x 5.6”x 6.0”)
Power Consumption	Max 6.5W
Weight	0.39kg (0.85lb)
Working Environment	-30 ℃ to 60 ℃ (-22 ℉ to 140 ℉), Humidity: ≤ 95% RH (non-condensing)
Storage Environment	-30 ℃ to 60 ℃ (-22 ℉ to 140 ℉), Humidity: ≤ 95% RH (non-condensing)
Reset Button	Support
LED Indicator	1, red/blue
PTZ	
Number of Presets	20
Pan Range	0° ~ 345°
Pan Speed	1°/s ~ 40°/s Preset speed: 40°/s
Tilt Range	0° ~ 90°
Tilt Speed	1°/s ~ 30°/s Preset speed: 30°/s

Dimensions

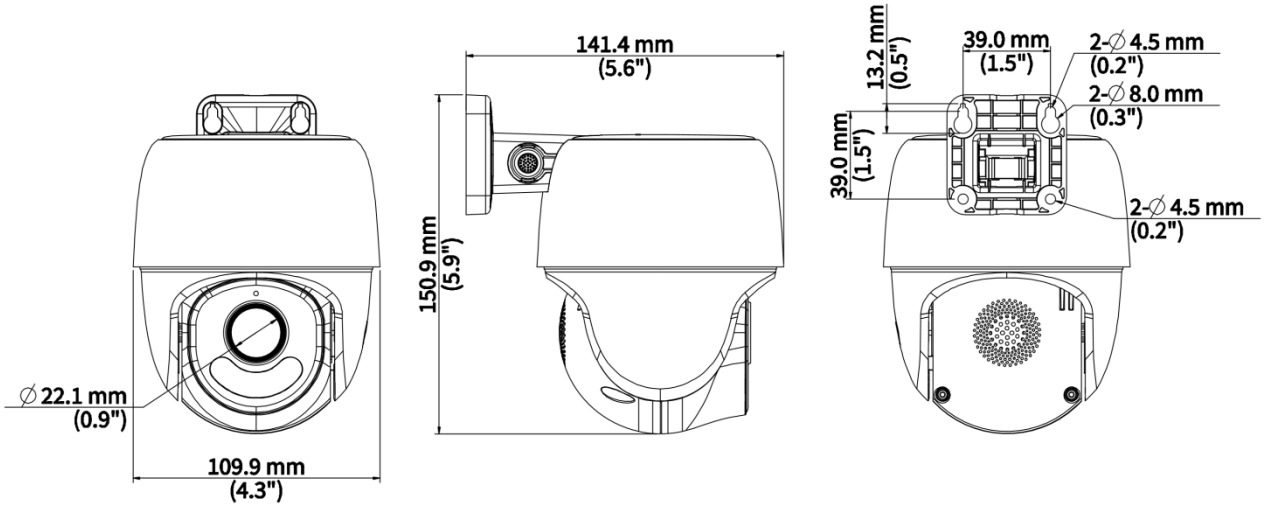

Zhejiang Uniview Technologies Co., Ltd.

http://www.uniview.com

overseasbusiness@uniview.com; globalsupport@uniview.com

No. 369, Xietong Road, Xixing Sub-district, Binjiang District, Hangzhou City, 310051, Zhejiang Province, China

©2025-2026 Zhejiang Uniview Technologies Co., Ltd. All rights reserved.

*Product specifications and availability are subject to change without notice.

*Despite our best efforts, technical or typographical errors may exist in this document.

Uniview cannot be held responsible for any such errors and reserves the right to change the contents of this document without prior notice.