# 4MP ColorHunter Wise-ISP Fixed Warm Light Bullet Network Camera

# IPC-B244-ADF28(40)K-WP-B

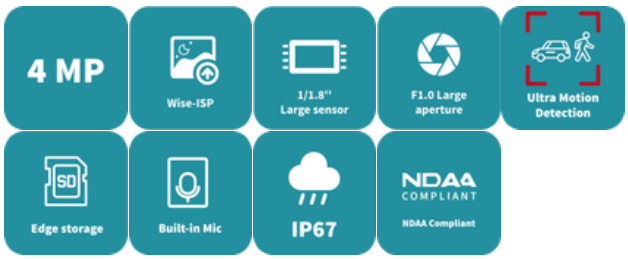





## Features

- High quality image with 4 MP, 1/1.8" CMOS sensor and F1.0 large aperture lens
- 4 MP (2560 × 1440)@25/20 fps; 3 MP (2304 × 1296)@30/25 fps; 1080P (1920 × 1080)@30/25 fps
- Ultra 265, H.265, H.264, MJPEG
- Supports ColorHunter with Wise-ISP technology, deeply optimizing color, detail, and smear effects in extremely low-light scenes
- 120 dB true WDR technology enables clear image in strong light scene
- Supports 9:16 corridor mode
- Built-in mic
- White light, up to 30 m (98.4 ft.) warm light distance
- MicroSD, up to 512 GB
- IP67 protection
- Supports PoE power supply
- 3-axis

# Specifications

| Model | IPC-B244-ADF28K-WP | IPC-B244-ADF40K-WP |
|---|---|---|
| Camera | | |
| Max Resolution | 4 MP | |
| Sensor | 1/1.8" CMOS | |
| Min. Illumination | Color: 0.0003 Lux (F1.0, AGC ON) | |
| Shutter | Auto/Manual, 1 to 1/100000 s | |
| Adjustment Angle | Pan: 0° to 360°, Tilt: 0° to 90°, Rotate: 0° to 360° | |
| S/N | > 52 dB | |
| WDR | 120 dB | |
| Lens | | |
| Focal Length | 2.8 mm | 4.0 mm |
| Iris Type | Fixed | |
| Iris | F1.0 | |
| Field of View (H) | 107.6° | 92.1 ° |
| Field of View (V) | 58.4° | 49.0° |
| Field of View (D) | 126.4 ° | 108.3° |
| Lens Type | Fixed | |
| DORI | | |
| DORI Distance (Lens) | 2.8 mm | 4 mm |
| DORI Distance (Detect) | 43.4 m (142.4 ft.) | 62.1 m (203.7 ft.) |
| DORI Distance (Observe) | 17.4 m (57.1 ft.) | 24.8 m (81.4 ft.) |
| DORI Distance (Recognize) | 8.7 m (28.5 ft.) | 12.4 m (40.7 ft.) |
| DORI Distance (Identify) | 4.3 m (14.1 ft.) | 6.2 m (20.3 ft.) |
| Illuminator | | |
| Supplemental Light | Warm light | |
| Light On/Off Control | Auto/Manual | |
| Illumination Distance (Warm Light) | 30 m (98.4 ft.) | |
| Video | | |
| Video Compression | Ultra 265, H.265, H.264, MJPEG | |
| H.264 Code Profile | Baseline profile, Main profile, High profile | |
| Frame Rate | Main Stream: 4 MP (2560 × 1440), max. 25 fps; 3 MP (2304 × 1296), max. 30 fps; 1080P (1920 × 1080), max. 30 fps;<br>Sub Stream: 720P (1280 × 720), max. 30 fps; D1 (720 × 576), max. 30 fps; 640 × 360, max. 30 fps; 2CIF (704 × 288), max. 30 fps; CIF (352 × 288), max. 30 fps; | |
| Video Bit Rate | 128 Kbps to 6144 Kbps | |
| U-code | Support | |
| OSD | Up to 4 OSDs | |
| Privacy Mask | Up to 4 areas | |
| ROI | Support | |
| Video Stream | Dual streams | |

| | |
|---|---|
| Image | |
| White Balance | Auto, Outdoor, Fine tune, Sodium lamp, Locked, Auto2 |
| Smart Illumination | Support |
| Digital Noise Reduction | 2D/3D DNR |
| Flip | Normal, Flip vertical, Flip horizontal, 180°, 90° Clockwise, 90° Anti-clockwise |
| Dewarping | N/A |
| HLC | Support |
| BLC | Support |
| Defog | Digital defog |
| Events | |
| Basic Detection | Motion detection, Ultra motion detection, Tampering alarm, Audio detection |
| General Function | Watermark, IP address filtering, Access policy, ARP protection, RTSP authentication, User authentication, HTTP authentication |
| Audio | |
| Audio Compression | G.711U, G.711A |
| Audio Bitrate | 64 Kbps |
| Two-way Audio | N/A |
| Suppression | Support |
| Sampling Rate | 8 kHz |
| Storage | |
| Edge Storage | MicroSD, up to 512 GB |
| Network Storage | ANR, NAS (NFS) |
| Network | |
| Protocols | IPv4, IPv6, IGMP, ICMP, ARP, TCP, UDP, DHCP, PPPoE, RTP, RTSP, RTCP, DNS, DDNS, NTP, UPnP, HTTP, HTTPS, SMTP, 802.1x, SNMP, QoS, RTMP, SSL/TLS |
| Compatible Integration | ONVIF (Profile S, Profile G, Profile T), API, SDK |
| User/Host | Up to 32 users. 3 user levels: administrator, common user and operator |
| Security | Password Protection, Strong Password, HTTPS Encryption, Export Operation Logs, Basic and Digest Authentication for RTSP, Digest Authentication for HTTP, TLS 1.2, WSSE and Digest Authentication for ONVIF |
| Client | APP, Uniarch client |
| Web Browser | Plug-in required live view: IE 10+, Chrome 45+, Firefox 52+, Edge 79+, Plug-in free live view: Chrome 57+, Firefox 58+, Edge 16+ |
| Interface | |
| Audio I/O | N/A |
| Alarm I/O | N/A |
| Serial Port | N/A |
| Built-in Mic | Support |
| Built-in Speaker | N/A |
| WIFI | N/A |
| Network | 1 × RJ45 10 M/100 M Base-TX Ethernet |
| Video Output | N/A |
| Certification | |

| | |
|---|---|
| EMC | CE-EMC (EN 55032, EN 61000-3-3, EN IEC 61000-3-2, EN 55035)<br>FCC (FCC 47 CFR part15 B) |
| Safety | CE LVD (EN 62368-1) |
| Environment | CE-RoHS (2011/65/EU;(EU)2015/863); WEEE (2012/19/EU); |
| Protection | IP67 (IEC 60529) |
| General | |
| Power | DC 12 V±25%, PoE (IEEE 802.3af) |
| Power Consumption | Max. 3.5 W |
| Power Interface | Ø5.5 mm coaxial power plug |
| Dimensions | 206 mm × 73 mm × 73 mm (8.1" × 2.9" × 2.9") (L × W × H) |
| Weight | 0.30 kg (0.66 lb.) |
| Material | Graphene + Plastic |
| Working Environment | -30 °C to 60 °C (-22 °F to 140 °F), Humidity: ≤ 95% RH (non-condensing) |
| Storage Environment | -30 °C to 60 °C (-22 °F to 140 °F), Humidity: ≤ 95% RH (non-condensing) |
| Surge Protection | 4 KV |
| Reset Button | Support |
| Web Client Language | 13 Languages: English, Simplified Chinese, Polish, German, Russian, French, Korean, Dutch, Czech, Portuguese, Spanish, Spanish (Europe), Italian |

# Dimensions

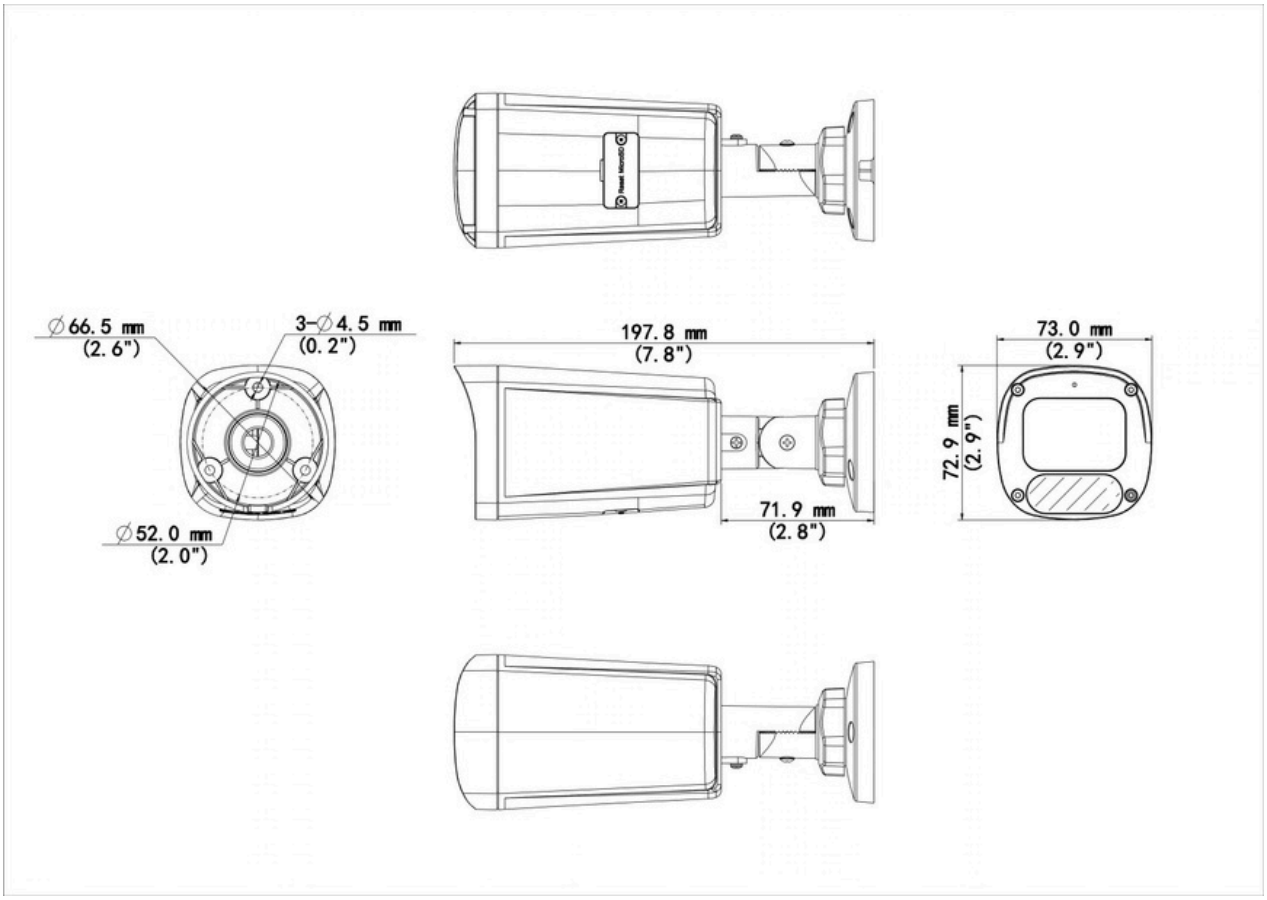

# Accessories

| TR-JB05-B-IN | TR-A01-IN | TR-UP06-C-IN-V2 |
|---|---|---|
| Small Bullet Junction Box(Elegant White) | NPT 3/4'' Waterproof Cable Gland | Pole Mounting Bracket for Bullet Junction Box Only |
|  |  |  |
| **TR-UC08-C-V2** | | |
| Bullet&Dome Corner Mounting Bracket | | |
|  | | |


**Zhejiang Uniview Technologies Co., Ltd.**

http://www.uniview.com

overseasbusiness@uniview.com; globalsupport@uniview.com

No. 369, Xietong Road, Xixing Sub-district, Binjiang District, Hangzhou City, 310051, Zhejiang Province, China



©2023-2025 Zhejiang Uniview Technologies Co., Ltd. All rights reserved.

*Product specifications and availability are subject to change without notice.

*Despite our best efforts, technical or typographical errors may exist in this document.

Uniview cannot be held responsible for any such errors and reserves the right to change the contents of this document without prior notice.